INDUSTRIAL RTD'S

	CODE	HEAD EXTENSION
A	2	NIPPLE (NOTE 1)
	4	NIPPLE/UNION/NIPPLE (NOTE 1)

	CODE	CONNECTION HEAD		
		MATERIAL	TYPE	NEMA
B	AN	ALUMINUM	WATER PROOF	4
	SN	STAINLESS STEEL	WATER PROOF, CORROSION RESISTANT	4, 4X
	AE	ALUMINUM	EXPLOSION PROOF (NOTE 2)	4
	SE	STAINLESS STEEL	EXPLOSION PROOF, CORROSION RESISTANT (NOTE 2)	4, 4X
	XD	ALUMINUM	EXPLOSION PROOF, FM, CSA APPROVED (NOTES 2 & 3)	4, 4X
	A	CAST IRON	WEATHER PROOF, RUGGED	
	L	POLYPROPYLENE	WEATHER PROOF, LIGHT WEIGHT	
	AX	ALUMINUM, LARGE DEVICE, EPOXY COATED	EXPLOSION PROOF, ATEX APPROVED (NOTE 3)	4

	CODE	CONDUIT OPENING
C		1/2 or 3/4NPT

	CODE	TUBE OPENING
D	1/2	1/2NPT

	CODE	"A" LENGTH
E		IN INCHES

	CODE	STRUCTURE
F		SINGLE (LEAVE BLANK)
	D	DUPLEX

	CODE	SHEATH DIAMETER (STANDARD 316 STN. STL.) (NOTE 4)
G	316	3/16" (.187)
	14	1/4" (.250)

	CODE	ELEMENT TYPE (NOTE 4)			
		STANDARD	MATERIAL	TCR	RESISTANCE @ 0° C.
H		DIN 43760	PLATINUM	.00385	100 OHMS (LEAVE BLANK)
	PT5	DIN 43760	PLATINUM	.00385	500 OHMS
	PT1	DIN 43760	PLATINUM	.00385	1000 OHMS (LT RANGE ONLY)
	JIS	JIS-C-1604-81	PLATINUM	.003916	100 OHMS
	SA	RC21-4-1966	PLATINUM	.003923	98.129 OHMS
	CU		COPPER	.00427	10 OHMS (LT RANGE ONLY)
	NI		NICKEL	.00672	120 OHMS

	CODE	TEMPERATURE RANGE
J	LT	-58 to +500° F (-50 to +260° C.)
	MT	-58 to +900° F (-50 to +482° C.)
		-292 to +932° F (-180 to +500° C) (LEAVE BLANK)
	HT	-292 to +1202° F (-180 to +650° C) (NOTE 5)

	CODE	SYSTEM
K	2W	2 WIRE (4 WIRE TOTAL WITH DUPLEX)
		3 WIRE (LEAVE BLANK)
	4W	4 WIRE (8 TOTAL WITH DUPLEX)

	CODE	ACCURACY
L		ASTM E1137 CLASS B (LEAVE BLANK)
	CLA	ASTM E1137 CLASS A

	CODE	WELL TYPE				
		OD-1	OD-2	ID	FLANGE FACE DIA.	NECK DIAMETER
M	45	.875	.875	.385	2.0	1.315
	46	.875	.875	.385	2.88	1.90
	451	.875	.875	.260	2.0	1.315
	461	.875	.875	.260	2.88	1.90

	CODE	WELL MATERIAL
N	P	304 STAINLESS STEEL
	Q	310 STAINLESS STEEL
	R	316 STAINLESS STEEL
	PLorRL	304or316 S. S. (LOW CARBON)
	N	CARBON STEEL
	J	INCONEL 600
	H	HASTELLOY C276

	CODE	"F" LENGTH
P		IN INCHES (2.25" STD.)

	CODE	"U" LENGTH
Q		IN INCHES

Notes:
(1) Standard Nipples - Steel, Schedule 40.
Standard Unions - Black Malleable Iron, 150#.
OPTIONAL STAINLESS STEEL
Nipples - 304 or 316 Stainless Steel, Schedule 40 or 80.
Unions - 304 or 316 Stainless Steel.
Example Ordering Code: 4AE 3/4 1/2 6(R or R80).
(2) Rated NEC class 1, Groups B, C and D.
(3) ATEX approved EEx d IIC, T6.
(4) Contact factory for other sheaths and element types.
(5) Standard in single construction, 3 wire, class B, Inconel sheath material.
(6) For an item that does not fall within the catalog description an (SP) can be added to the ordering code as part of a custom construction.

EXAMPLE: 4 AE $\frac{3}{4}$ — $\frac{1}{2}$ — 4 — D 14 PT5 LT 4W CLA — 45 R 2.25 — 12

A B C D E F G H J K L M N P Q

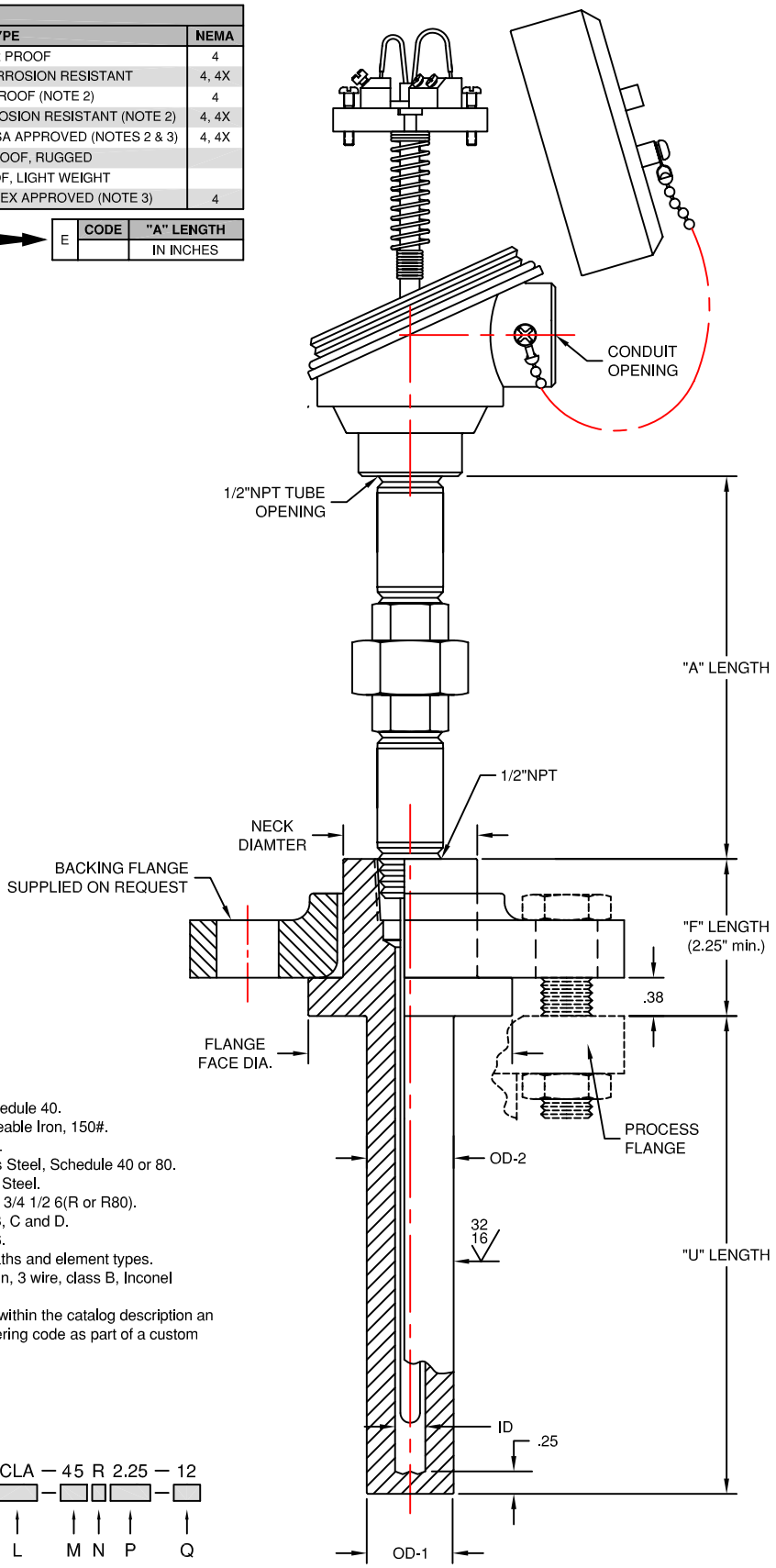

THERMO ELECTRIC

TEMPERATURE MEASUREMENT DESIGNER'S GUIDE
WWW.THERMO-ELECTRIC-DIRECT.COM

SECTION INRD

DRILLED VAN STONE WELL ASSEMBLIES
STRAIGHT CONSTRUCTION
1" & 1 1/2" FLANGE CONNECTION

The information contained hereon shall be considered the sole property of Thermo Electric Company, Inc. The recipient thereof agrees not to disclose or reproduce said information to parties outside the recipients organization without the written permission of Thermo Electric.

Doc. No.: TE-CO010109-INRD-110