INDUSTRIAL THERMOCOUPLES

	CODE	HEAD EXTENSION
A	2	NIPPLE (NOTE 1)
	4	NIPPLE/UNION/NIPPLE (NOTE 1)

	CODE	CONNECTION HEAD		
		MATERIAL	TYPE	NEMA
B	AN	ALUMINUM	WATER PROOF	4
	SN	STAINLESS STEEL	WATER PROOF, CORROSION RESISTANT	4, 4X
	AE	ALUMINUM	EXPLOSION PROOF (NOTE 2)	4
	SE	STAINLESS STEEL	EXPLOSION PROOF, CORROSION RESISTANT (NOTE 2)	4, 4X
	XD	ALUMINUM	EXPLOSION PROOF, FM, CSA APPROVED (NOTES 2 & 3)	4, 4X
	A	CAST IRON	WEATHER PROOF, RUGGED	
	L	POLYPROPYLENE	WEATHER PROOF, LIGHT WEIGHT	
	AX	ALUMINUM, LARGE DEVICE, EPOXY COATED	EXPLOSION PROOF, ATEX APPROVED (NOTE 3)	4

	CODE	CONDUIT OPENING
C		1/2 or 3/4NPT

	CODE	TUBE OPENING
D	1/2	1/2NPT

	CODE	"A" LENGTH
E		IN INCHES

	CODE		ELEMENT CONSTRUCTION			
	SINGLE	DUPLEX	DIAMETER	WIRE SIZE (AWG)	INSULATION	SPRING LOADED
F	ASL18	ADSL18	1/8"	24	MgO-SHEATH	YES
	A316	AD316	3/16"	20	MgO-SHEATH	NO
	ASL316	ADSL316	3/16"	20	MgO-SHEATH	YES
	A14	AD14	1/4"	18	MgO-SHEATH	NO
	ASL14	ADSL14	1/4"	18	MgO-SHEATH	YES
	A516	AD516	5/16"	16	MgO-SHEATH	NO
	ASL516	ADSL516	5/16"	16	MgO-SHEATH	YES
	A38	AD38	3/8"	15	MgO-SHEATH	NO
	ASL38	ADSL38	3/8"	15	MgO-SHEATH	YES
	B14	BD14	.325"	14	CERAMIC BEAD	NO
	B20	BD20	.183"	20	CERAMIC BEAD	NO

	CODE		CALIBRATION
	STANDARD	SPECIAL (NOTE 4)	
G	J	JJ	IRON (+) vs CONSTANTAN (-)
	K	KK	CHROMEL (+) vs ALUMEL (-)
	T	TT	COPPER (+) vs CONSTANTAN (-)
	E	EE	CHROMEL (+) vs CONSTANTAN (-)
	N	NN	NICROSIL (+) vs NISIL (-)
	-	KKS	CHROMEL (+) vs ALUMEL (-) (NOTE 5)
	-	EES	CHROMEL (+) vs CONSTANTAN (-) (NOTE 5)

	CODE	MEASURING JUNCTION
H	G	SINGLE GROUNDED, GROUNDED TO SHEATH
	U	SINGLE UNGROUNDED, ISOLATED FROM SHEATH
	DG	DUPLEX GROUNDED, GROUNDED TO SHEATH
	DU	DUPLEX UNGROUNDED, ISOLATED FROM SHEATH

	CODE	ELEMENT SHEATH MATERIAL	STANDARD CALIBRATIONS (NOTE 6)
J	P	304 STN. STL.	J, K, T
	R	316 STN. STL.	J, K, T, E, N
	Q	310 STN. STL.	J, K, E
	J	INCONEL 600	K, N, KKS, EES (NOTE 5)

DROP CODE WHEN USING CERAMIC BEADED ELEMENTS

	CODE	WELL TYPE				
		PROCESS NPT	OD-1	OD-2	ID	HEX
K	16	3/4"	.750	.750	.385	1.13
	18	1"	.750	.750	.385	1.38
	161	3/4"	.750	.750	.260	1.13
	181	1"	.750	.750	.260	1.38

	CODE	WELL MATERIAL
L	P	304 STAINLESS STEEL
	B	BRASS
	R	316 STAINLESS STEEL
	PLorRL	304or316 S. S. (LOW CARBON)
	N	CARBON STEEL

	CODE	"F" LENGTH
M		IN INCHES (1.75" STD.)

	CODE	"U" LENGTH
N		IN INCHES

Notes:
(1) Standard Nipples - Steel, Schedule 40.
Standard Unions - Black Malleable Iron, 150#.
OPTIONAL STAINLESS STEEL
Nipples - 304 or 316 Stainless Steel, Schedule 40 or 80.
Unions - 304 or 316 Stainless Steel.
Example Ordering Code: 4AE 3/4 1/2 6(R or R80).
(2) Rated NEC class 1, Groups B, C and D.
(3) ATEX approved EEx d IIC, T6.
(4) Meets or exceeds Special Initial Calibration Tolerances per ANSI MC96.1-1982 and ASTM E230-1993
(5) KKS & EES denotes stabilized thermocouple and special tolerance.
(6) Contact factory for other calibration and sheath combinations.
(7) For an item that does not fall within the catalog description an (SP) can be added to the ordering code as part of a custom construction.

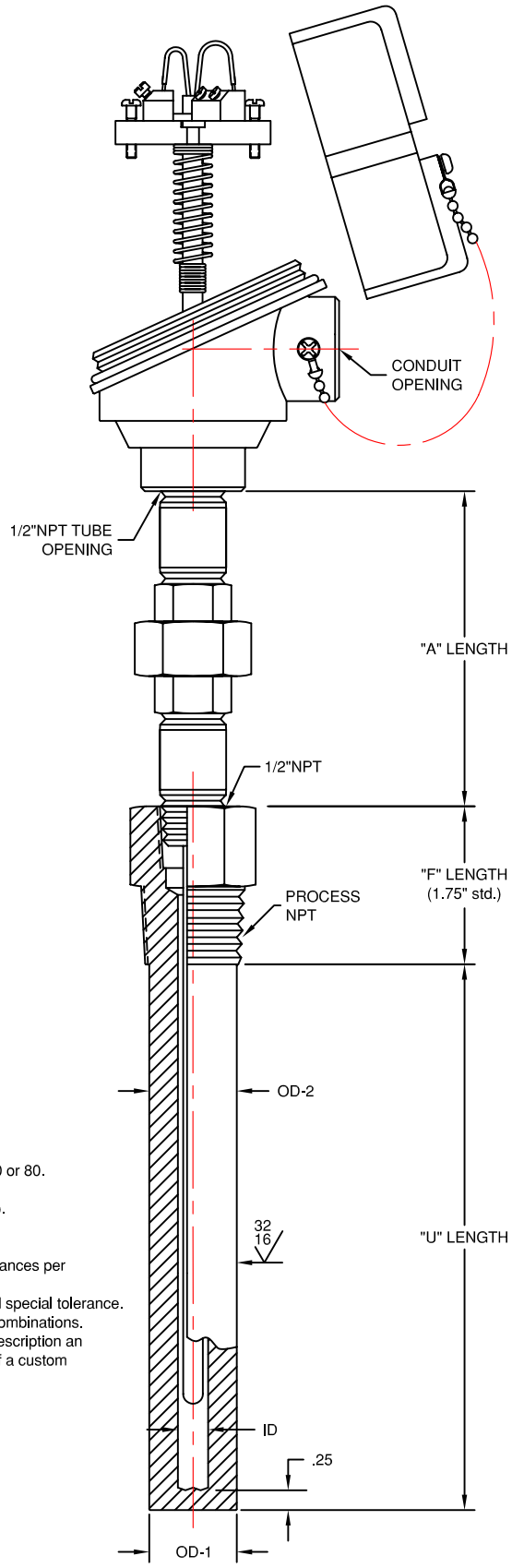

EXAMPLE: 4 AE $\frac{3}{4}$ — $\frac{1}{2}$ — 4 — ASL14 KK G Q — 18 R 1.75 — 12

A B C D E F G H J K L M N

THERMO ELECTRIC

TEMPERATURE MEASUREMENT DESIGNER'S GUIDE
WWW.THERMO-ELECTRIC-DIRECT.COM

SECTION INTC

DRILLED THREADED WELL ASSEMBLIES
STRAIGHT CONSTRUCTION
3/4 & 1"NPT PROCESS CONNECTIONS

The information contained hereon shall be considered the sole property of Thermo Electric Company, Inc. The recipient thereof agrees not to disclose or reproduce said information to parties outside the recipients organization without the written permission of Thermo Electric.

Doc. No.: TE-CO010109-INTC-020