THERMOWELLS

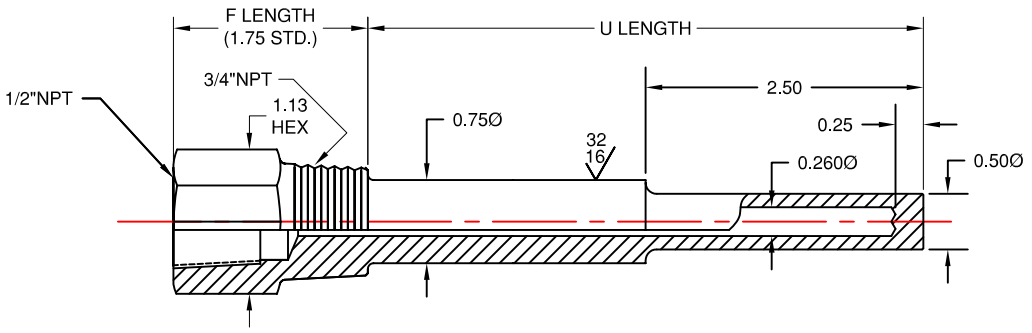

TYPE 122

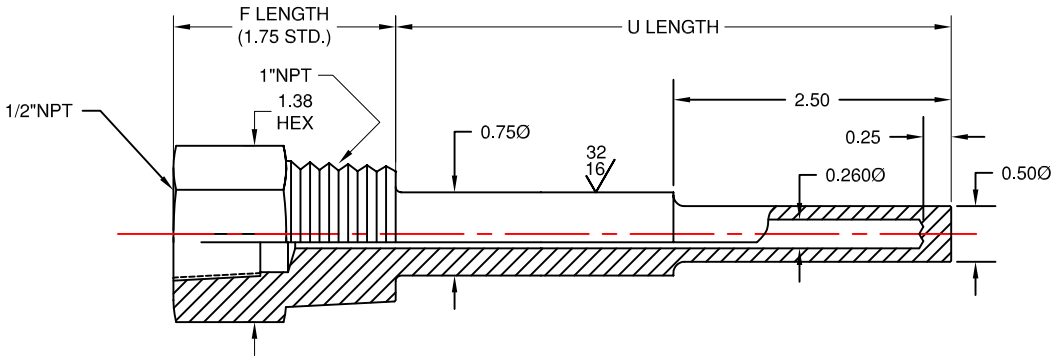

TYPE 142

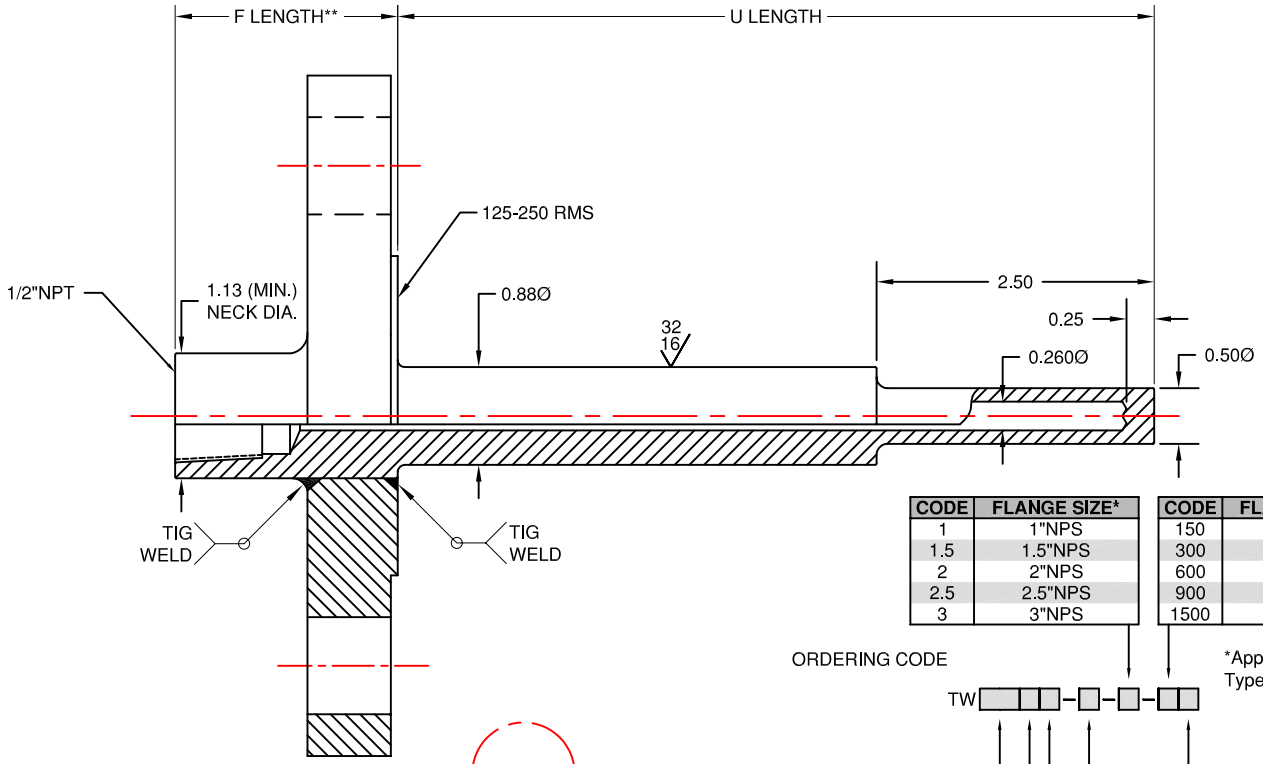

TYPE 432

CODE	FLANGE SIZE*
1	1"NPS
1.5	1.5"NPS
2	2"NPS
2.5	2.5"NPS
3	3"NPS

CODE	FLANGE RATING*
150	150 LBS.
300	300 LBS.
600	600 LBS.
900	900 LBS.
1500	1500 LBS.

*Applies to Type 432 Only

ORDERING CODE

TW ☐☐☐ – ☐ – ☐ – ☐☐

CODE	THERMOWELL TYPE
	(INSERT WELL TYPE)

CODE	WELL MATERIAL
P	304 STN. STL.
R	316 STN. STL.
PLorRL	304 or 316L STN. STL.
(F11)	1.25% CR. - .5 MO.
N	CARBON STEEL

CODE	U LENGTH
	(IN INCHES)

CODE	F LENGTH**
	(IN INCHES)

CODE	FLANGE TYPE*
FF	FLAT FACE
RF	RAISED FACE
RJ	RING JOINT

**2" Minimum Length For Flanged Thermowells, May Be Longer For Larger Flange Sizes.

STANDARD TOLERANCES

U LENGTH
12" or Less ±.063
12" or Over ±.13
F LENGTH
±.25
STEM DIAMETER
±.015
BORE DIAMETER
+.005/-.003
END THICKNESS
±.063

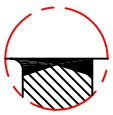

OPTIONAL
FULL PENETRATION WELD
(Add (FP) to end of Ordering Code)

PLUG & CHAIN
Prevent foreign matter from entering test wells when not in use. Plugs are available in Brass or Stainless Steel. A captive chain is attached to prevent loss.
To order as a test well specify plug & chain code letters after well ordering code.

CODE	PLUG & CHAIN
-BPC	BRASS
-SSPC	STN. STL.

THERMO ELECTRIC

TEMPERATURE MEASUREMENT DESIGNER'S GUIDE
WWW.THERMO-ELECTRIC-DIRECT.COM

SECTION TWPT

DRILLED THREADED & FLANGED
THERMOWELLS
STEPPED DOWN SHANK

The information contained hereon shall be considered the sole property of Thermo Electric Company, Inc. The recipient thereof agrees not to disclose or reproduce said information to parties outside the recipients organization without the written permission of Thermo Electric.

Doc. No.: TE-CO010109-TWPT-060